Nowodvorski
LIGHTING
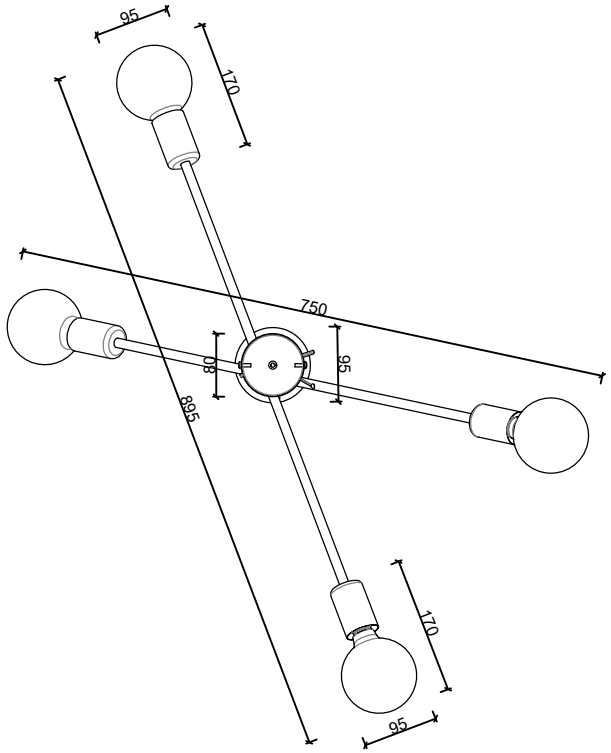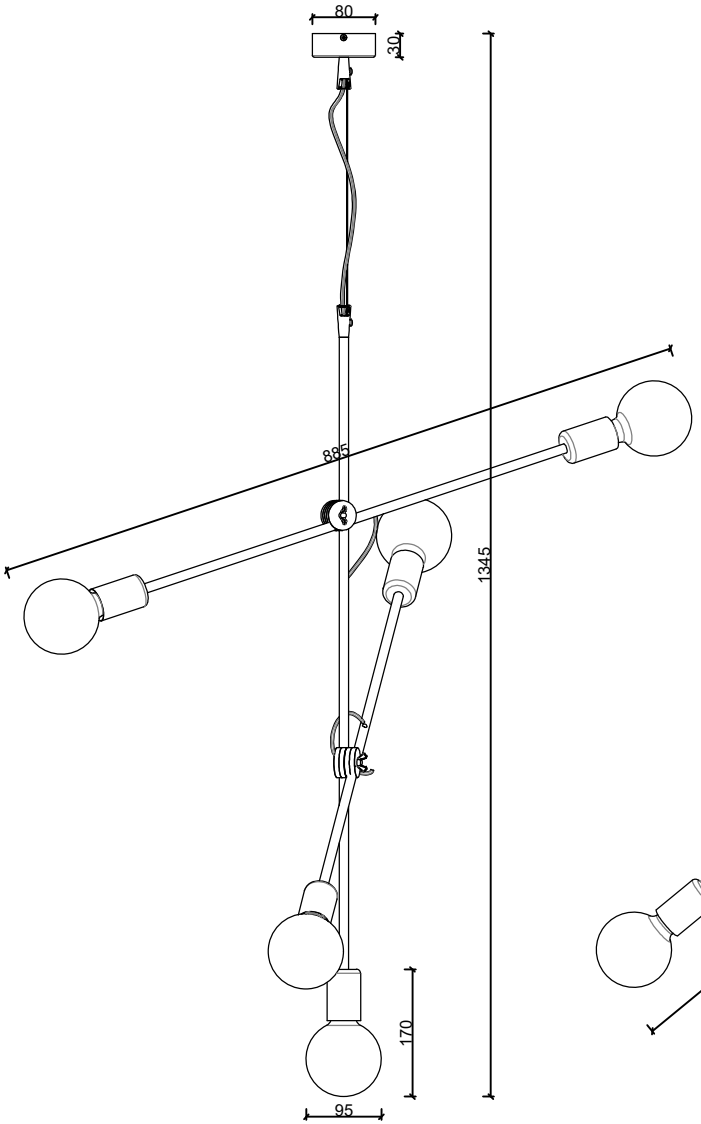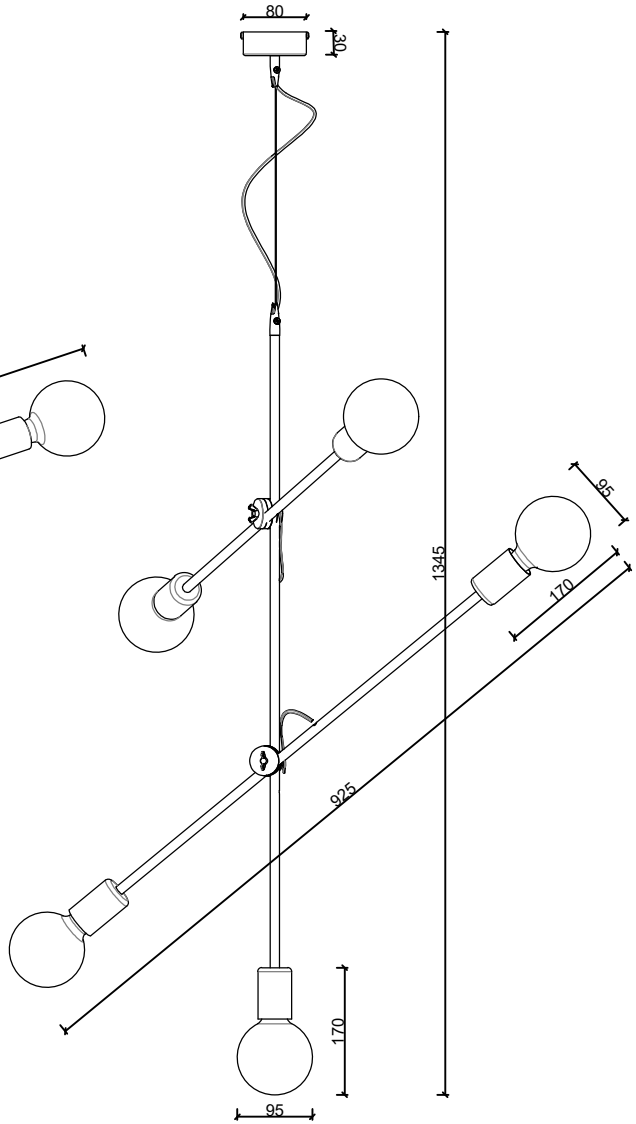
STICKS 6270