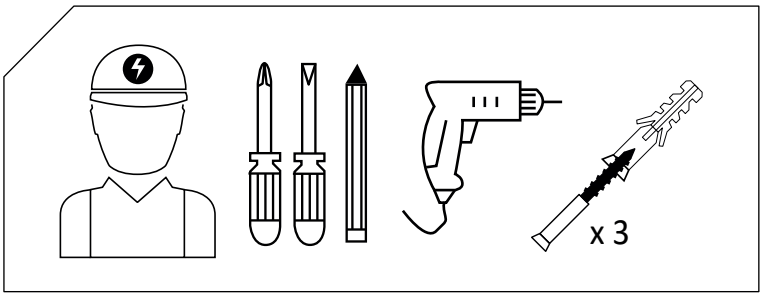

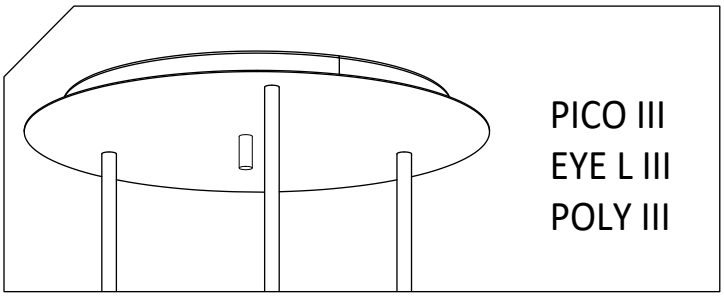

PICO III
EYE L III
POLY III

1

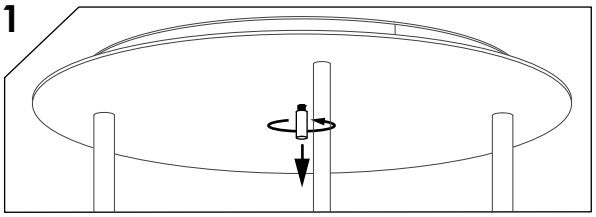

2

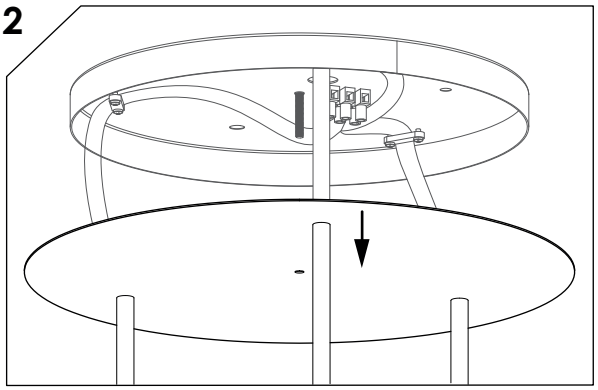

3

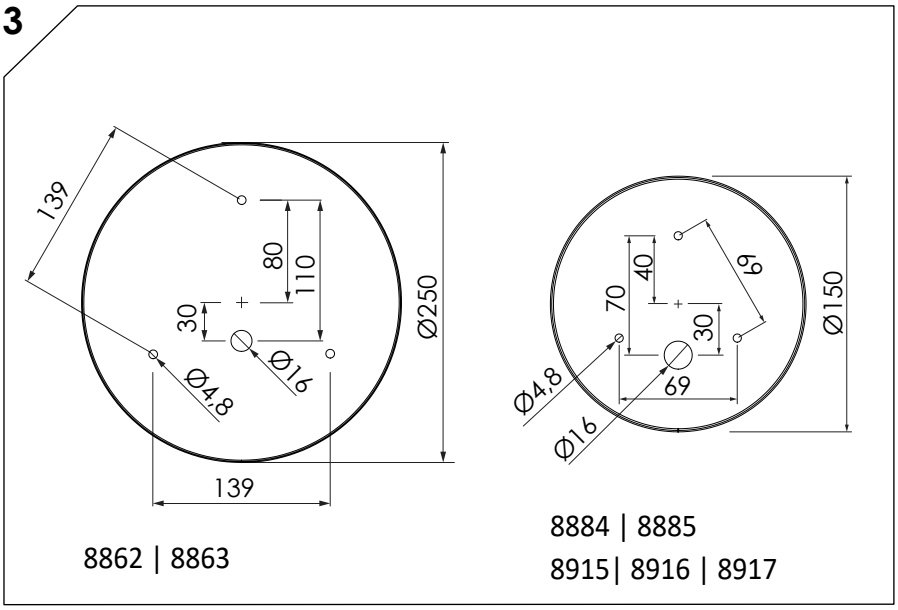

8862 | 8863

8884 | 8885
8915| 8916 | 8917

4

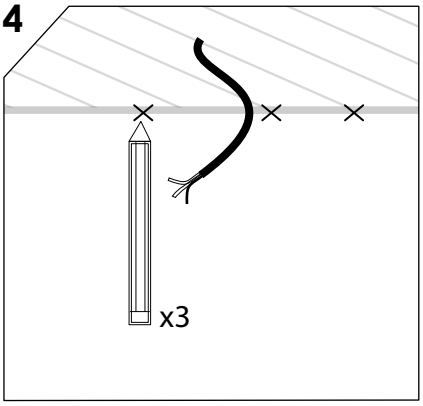

5

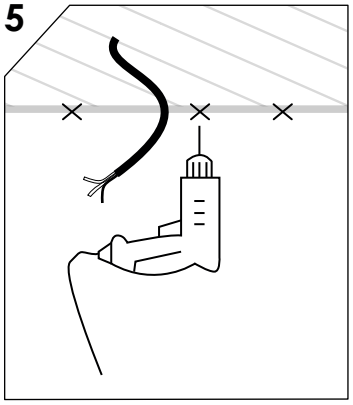

6

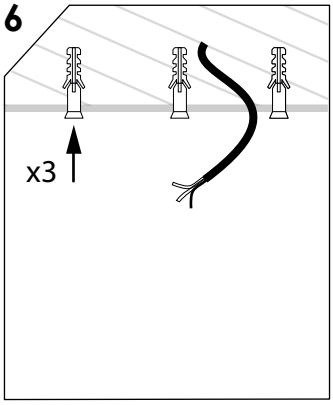

7

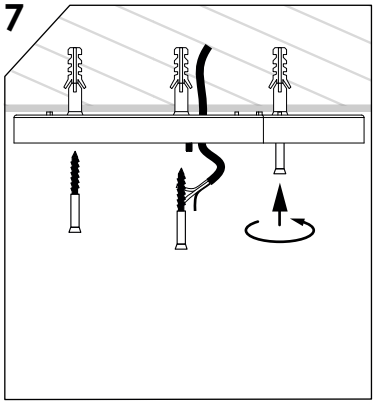

8

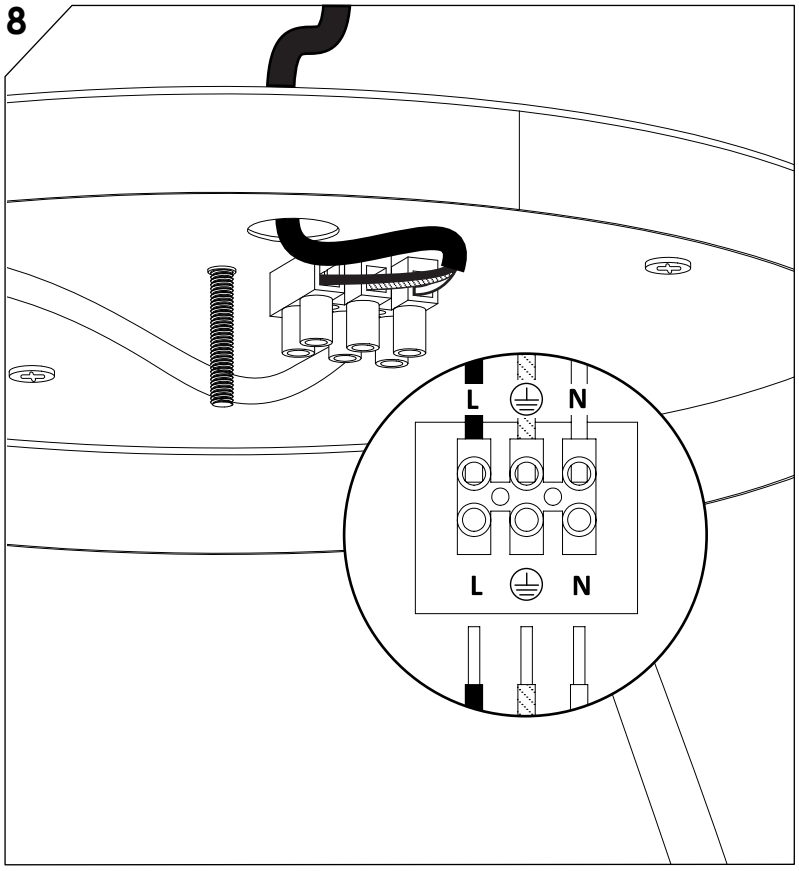

9

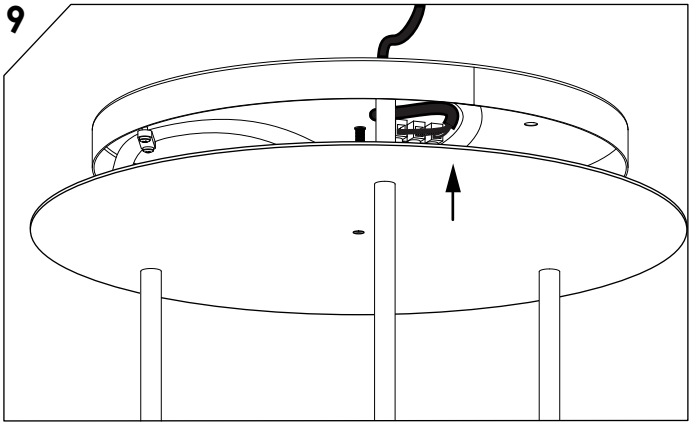
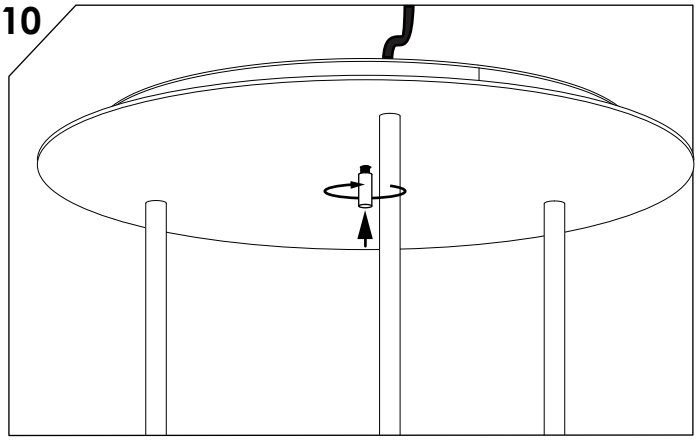
10